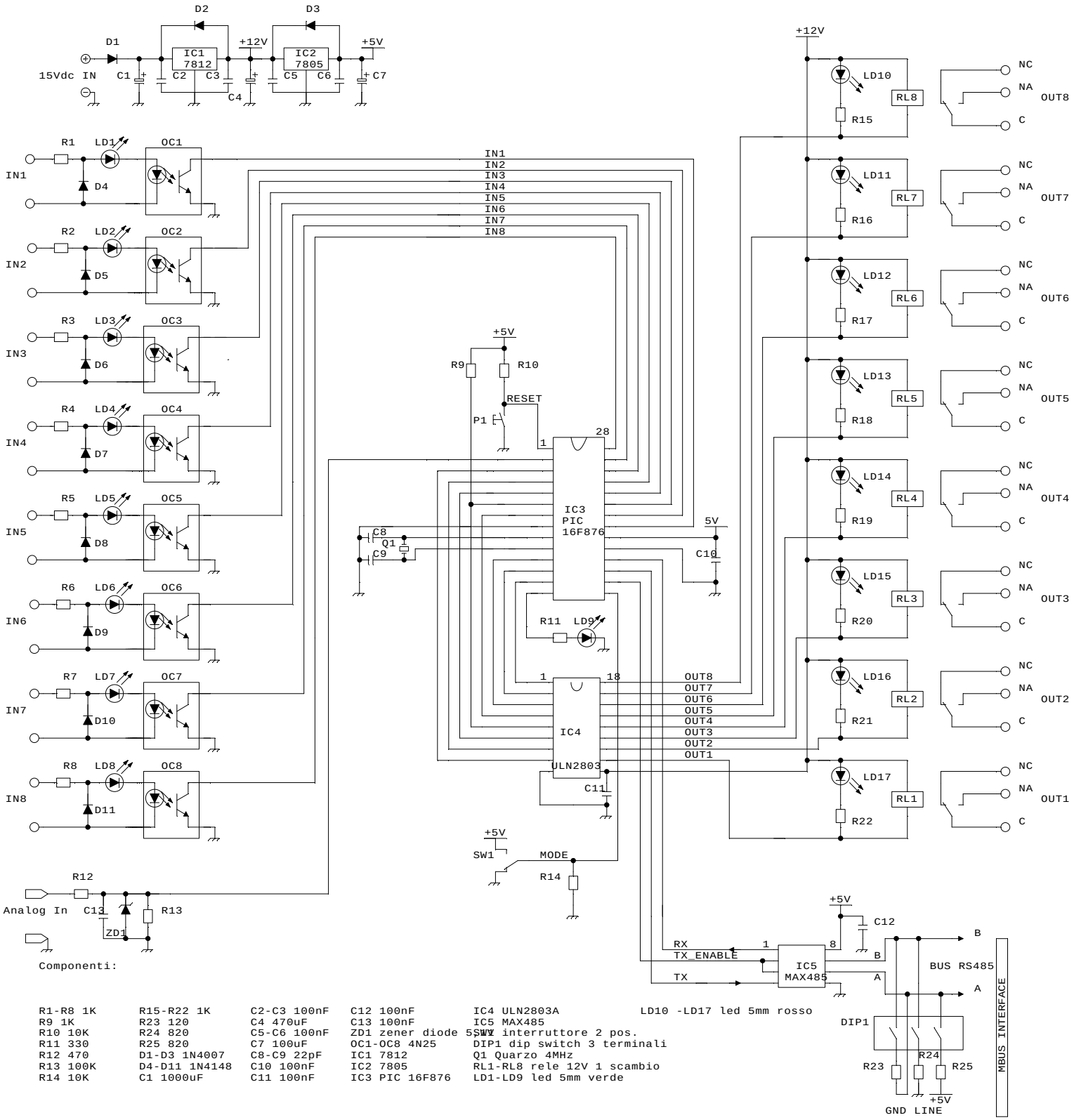

Componenti:

R1-R8 1K	R15-R22 1K	C2-C3 100nF	C12 100nF	IC4 ULN2803A	LD10 -LD17 led 5mm rosso
R9 1K	R23 120	C4 470uF	C13 100nF	IC5 MAX485	
R10 10K	R24 820	C5-C6 100nF	ZD1 zener diode 5V1	SW1 interruttore 2 pos.	
R11 330	R25 820	C7 100uF	OC1-OC8 4N25	DIP1 dip switch 3 terminali	
R12 470	D1-D3 1N4007	C8-C9 22pF	IC1 7812	Q1 Quarzo 4MHz	
R13 100K	D4-D11 1N4148	C10 100nF	IC2 7805	RL1-RL8 rele 12V 1 scambio	
R14 10K	C1 1000uF	C11 100nF	IC3 PIC 16F876	LD1-LD9 led 5mm verde	