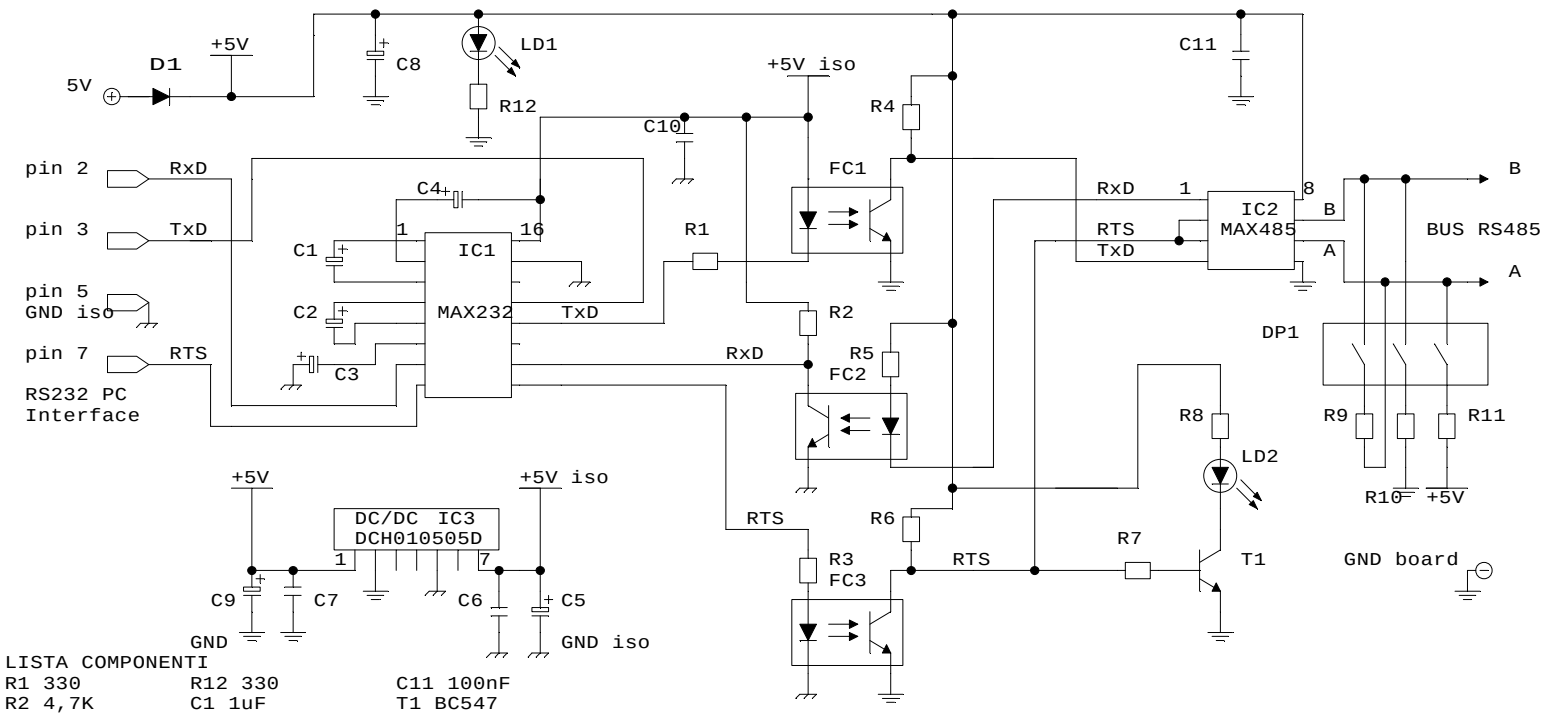

LISTA COMPONENTI

R1 330	R12 330	C11 100nF
R2 4,7K	C1 1uF	T1 BC547
R3 330	C2 1uF	FC1-3 4N25
R4 4,7K	C3 1uF	IC1 MAX232
R5 330	C4 1uF	IC2 MAX485
R6 4,7K	C5 47uF	IC3 DCH010505D
R7 10K	C6 100nF	DP1 DIP SWITCH 3 VIE
R8 330	C7 100nF	LD1 LED VERDE
R9 120	C8 470uF	LD2 LED ROSSO
R10 820	C9 100uF	D1 1N4007
R11 820	C10 100nF	

TWO GROUND

GND board

Isolated GND